# VCC1

CMOS Crystal Oscillator

## Description

Vectron's VCC1 Crystal Oscillator (XO) is a quartz stabilized square wave generator with a CMOS output. The VCC1 uses a fundamental or 3rd overtone crystal resulting in very low jitter performance, and a monolithic IC which improves reliability and reduces cost.

## Features

- Ultra Low Jitter, Fundamental or 3rd OT Crystal Design
- CMOS Output Crystal Oscillator
- Output Frequencies from 1.024 MHz to 190.000 MHz
- 5.0, 3.3, 2.5 or 1.8 V Operation
- Output Disable Feature
- Excellent 20ppm temperature stability
- -10/70°C , -40/85°C or -55/125°C operating temperature
- Small Industry Standard Package, 7 x 5 mm
- Product is compliant to RoHS directive and fully compatible with lead free assembly

## Applications

- SONET/SDH/DWDM
- Ethernet, GE, SynchE
- Storage Area Networking
- Fiber Channel
- Digital Video
- Broadband Access
- Base Stations, Picocells
- Driving A/D's, D/A's, FPGA's
- Test and Measurement
- COTS

## Block Diagram

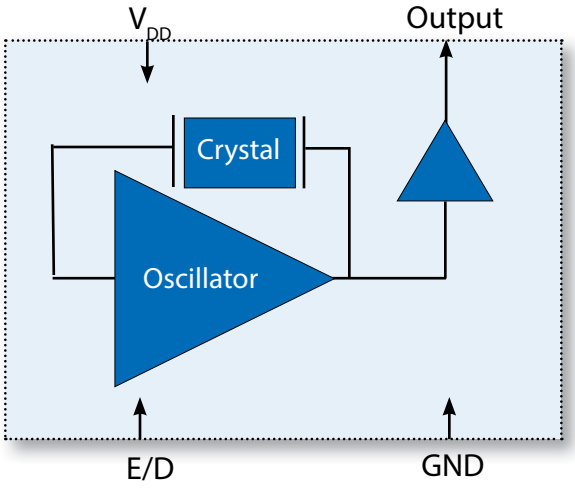

| Table 1. Electrical Performance, 5V Option | | | | | |
|---|---|---|---|---|---|
| Parameter | Symbol | Minimum | Typical | Maximum | Units |
| **Supply** | | | | | |
| Voltage[1] | $V_{DD}$ | 4.5 | 5.0 | 5.5 | V |
| Max Voltage | | -0.7 | | 7 | V |
| Current[2] | $I_{DD}$ | | | | mA |
| ≤20.000MHz | | | | 10 | |
| 20.001 to 50.000MHz | | | | 30 | |
| 50.001 to 85.000MHz | | | | 50 | |
| 85.001 to 125.000MHz | | | | 60 | |
| Current, Output Disabled | | | | 30 | uA |
| **Frequency** | | | | | |
| Nominal Frequency[3] | $f_N$ | 1.544 | | 125.000 | MHz |
| Stability[4], (Ordering Option) | | ±20, ±25, ±32, ±50, ±100 | | | ppm |
| **Outputs** | | | | | |
| Output Logic Levels[2] | | | | | |
| Output Logic High | $V_{OH}$ | $0.9*V_{DD}$ | | | V |
| Output Logic Low | $V_{OL}$ | | | $0.1*V_{DD}$ | V |
| Output Logic High Drive | $I_{OH}$ | 16 | | | mA |
| Output Logic Low Drive | $I_{OL}$ | 16 | | | mA |
| Load | $I_{OUT}$ | | | 15 | pF |
| Output Rise /Fall Time[2] | $t_R/t_F$ | | | | ns |
| <20.000MHz | | | | 8 | |
| 20.000 to 50.000MHz | | | | 5 | |
| 50.001 to 125.000MHz | | | | 2 | |
| Output Leakage, Output Disabled | $I_Z$ | | | ±10 | uA |
| Duty Cycle[2,5] | | 45 | 50 | 55 | % |
| Period Jitter[6] | ϕJ | | | | ps |
| RMS | | | 2.5 | | |
| Peak-Peak | | | 18 | | |
| RMS Jitter, 12k-20MHz | ϕJ | | 0.5 | 1 | ps |
| **Enable/Disable** | | | | | |
| Output Enable/Disable[7] | | | | | |
| Output Enable | $V_{IH}$ | 4.0 | | | V |
| Output Disable | $V_{IL}$ | | | 0.8 | V |
| Disable time | $t_D$ | | | 100 | ns |
| Enable Internal Pull-Up Resistor | | | 100 | | Kohm |
| Start-Up Time | $t_{SU}$ | | | 10 | ms |
| Operating Temp, (Ordering Option) | $T_{OP}$ | -10/70, -40/85, -55/125 | | | °C |

1] The power supply should have by-pass capacitors as close to the supply and to ground as possible, for example 0.1 and 0.01uF.
2] Parameters are tested with the test circuit shown in Figure 1.
3] See Standard Frequencies and Ordering Information tables for more specific information.
4] Includes initial accuracy, operating temperature, supply voltage, shock and vibration (not under operation) and 10 years aging.
5] Duty Cycle is measured as On Time/Period, see Fig 2.
6] Broadband Period Jitter measured using a LeCroy Wavemaster 8600A, 90K samples, see Application Note for Typical Phase Noise and Jitter Performance.
7] The Output is Enabled if the Enable/Disable is left open.

| Table 2. Electrical Performance, 3.3V Option | | | | | |
|---|---|---|---|---|---|
| Parameter | Symbol | Mininum | Typical | Maximum | Units |
| **Supply** | | | | | |
| Voltage[1] | $V_{DD}$ | 2.97 | 3.3 | 3.63 | V |
| Maximum Voltage | | -0.5 | | 5 | V |
| Current[2]<br>≤20.000<br>20.001 to 50.000<br>50.001 to 85.000<br>85.001 to 190.000 | $I_{DD}$ | | | <br>7<br>20<br>30<br>50 | mA |
| Current, Output Disabled | | | | 30 | uA |
| **Frequency** | | | | | |
| Nominal Frequency[3] | $f_N$ | 1.024 | | 190.000 | MHz |
| Stability[4], (Ordering Option) | | ±20, ±25, ±32, ±50, ±100 | | | ppm |
| **Outputs** | | | | | |
| Output Logic Levels[2]<br>Output Logic High<br>Output Logic Low<br>Output Logic High Drive<br>Output Logic Low Drive | <br>$V_{OH}$<br>$V_{OL}$<br>$I_{OH}$<br>$I_{OL}$ | <br>$0.9*V_{DD}$<br><br>8<br>8 | | <br><br>$0.1*V_{DD}$ | <br>V<br>V<br>mA<br>mA |
| Load | $I_{OUT}$ | | | 15 | pF |
| Output Rise /Fall Time[2]<br><20.000MHz<br>20.000 to 50.000MHz<br>50.001 to 90.000MHz<br>90.001 to 190.000MHz | $t_R/t_F$ | | | <br>6<br>4<br>3<br>2 | ns |
| Output Leakage, Output Disabled[2,5] | $I_Z$ | | | ±10 | uA |
| Duty Cycle[2,5] | | 45 | 50 | 55 | % |
| Period Jitter[6]<br>RMS<br>Peak-Peak | ϕJ | | <br>2.5<br>18 | | ps |
| RMS Jitter, 12k-20M | ϕJ | | 0.5 | 1 | ps |
| **Enable/Disable** | | | | | |
| Output Enable/Disable[7]<br>Output Enable<br>Output Disable | <br>$V_{IH}$<br>$V_{IL}$ | <br>2.0 | | <br><br>0.5 | <br>V<br>V |
| Disable time | $t_D$ | | | 100 | ns |
| Enable Internal Pull-Up Resistor | | | 100 | | Kohm |
| Start-Up Time | $t_{SU}$ | | | 10 | ms |
| Operating Temp, (Ordering Option) | $T_{OP}$ | -10/70, -40/85, -55/125 | | | °C |

1] The power supply should have by-pass capacitors as close to the supply and to ground as possible, for example 0.1 and 0.01uF.
2] Parameters are tested with the test circuit shown in Figure 1.
3] See Standard Frequencies and Ordering Information tables for more specific information.
4] Includes initial accuracy, operating temperature, supply voltage, shock and vibration (not under operation) and 10 years aging.
5] Duty Cycle is measured as On Time/Period, see Fig 2.
6] Broadband Period Jitter measured using a LeCroy Wavemaster 8600A, 90K samples, see Application Note for Typical Phase Noise and Jitter Performance.
7] The Output is Enabled if the Enable/Disable is left open.

**Table 3. Electrical Performance, 2.5V Option**

| Parameter | Symbol | Mininum | Typical | Maximum | Units |
|---|---|---|---|---|---|
| **Supply** | | | | | |
| Voltage[1] | $V_{DD}$ | 2.25 | 2.5 | 2.75 | V |
| Maximum Voltage | | -0.5 | | 5 | V |
| Current[2]<br>≤20.000MHz<br>20.001 to 50.000MHz<br>50.001 to 110.000MHz<br>110.001 to 190.000MHz | $I_{DD}$ | | | <br>7<br>15<br>20<br>30 | mA |
| Current, Output Disabled | | | | 30 | uA |
| **Frequency** | | | | | |
| Nominal Frequency[3] | $f_N$ | 1.544 | | 190.000 | MHz |
| Stability[4], (Ordering Option) | | ±20, ±25, ±32, ±50, ±100 | | | ppm |
| **Outputs** | | | | | |
| Output Logic Levels[2,3]<br>Output Logic High<br>Output Logic Low<br>Output Logic High Drive<br>Output Logic Low Drive<br>Output Logic High Drive[5]<br>Output Logic Low Drive[5] | <br><br><br>$V_{OH}$<br>$V_{OL}$<br>$I_{OH}$<br>$I_{OL}$ | <br>$0.9*V_{DD}$<br><br>4<br>4<br>8<br>8 | | <br><br>$0.1*V_{DD}$ | <br>V<br>V<br>mA<br>mA<br>mA<br>mA |
| Load | $I_{OUT}$ | | | 15 | pF |
| Output Rise /Fall Time[2]<br><20.000MHz<br>20.000 to 50.000MHz<br>50.001 to 90.000MHz<br>90.001 to 190.000MHz | $t_R/t_F$ | | | <br>10<br>6<br>3<br>2 | ns |
| Output Leakage, Output Disabled | | | | ±10 | uA |
| Duty Cycle[2,6] | | 45 | 50 | 55 | % |
| Period Jitter[7]<br>RMS<br>Peak-Peak | ϕJ | | <br>2.5<br>18 | | ps |
| RMS Jitter, 12k-20MHz | ϕJ | | 0.5 | 1 | ps |
| **Enable/Disable** | | | | | |
| Output Enable/Disable[8]<br>Output Enable<br>Output Disable | <br>$V_{IH}$<br>$V_{IL}$ | <br>1.75 | | <br><br>0.5 | <br>V<br>V |
| Disable time | $t_D$ | | | 100 | ns |
| Enable Internal Pull-Up Resistor | | | 100 | | Kohm |
| Start-Up Time | $t_{SU}$ | | | 10 | ms |
| Operating Temp, (Ordering Option) | $T_{OP}$ | -10/70, -40/85, -55/125 | | | °C |

1] The power supply should have by-pass capacitors as close to the supply and to ground as possible, for example 0.1 and 0.01uF.
2] Parameters are tested with the test circuit shown in Figure 1.
3] See Standard Frequencies and Ordering Information tables for more specific information.
4] Includes initial accuracy, operating temperature, supply voltage, shock and vibration (not under operation) and 10 years aging.
5] Output Frequencies > 35MHz.
6] Duty Cycle is measured as On Time/Period, see Fig 2.
7] Broadband Period Jitter measured using a LeCroy Wavemaster 8600A, 90K samples, see Application Note for Typical Phase Noise and Jitter Performance.
8] The Output is Enabled if the Enable/Disable is left open.

| Table 4. Electrical Performance, 1.8V Option | | | | | |
|---|---|---|---|---|---|
| Parameter | Symbol | Mininum | Typical | Maximum | Units |
| **Supply** | | | | | |
| Voltage[1] | $V_{DD}$ | 1.71 | 1.8 | 1.89 | V |
| Maximum Voltage | | -0.5 | | 3.6 | V |
| Current[2] | $I_{DD}$ | | | | mA |
| ≤20.000MHz | | | | 5 | |
| 20.001 to 70.000MHz | | | | 15 | |
| 70.001 to 96.000MHz | | | | 20 | |
| 96.001 to 125.000MHz | | | | 25 | |
| 125.001 to 172.000MHz | | | | 30 | |
| Current, Output Disabled | | | | 30 | uA |
| **Frequency** | | | | | |
| Nominal Frequency[3] | $f_N$ | 1.544 | | 172.000 | MHz |
| Stability[4], (Ordering Option) | | ±20, ±25, ±32, ±50, ±100 | | | ppm |
| **Outputs** | | | | | |
| Output Logic Levels[2,3] | | | | | |
| Output Logic High | $V_{OH}$ | 0.9*$V_{DD}$ | | | V |
| Output Logic Low | $V_{OL}$ | | | 0.1*$V_{DD}$ | V |
| Output Logic High Drive | $I_{OH}$ | 2.8 | | | mA |
| Output Logic Low Drive | $I_{OL}$ | 2.8 | | | mA |
| Output Logic High Drive[5] | $I_{OH}$ | 8 | | | |
| Output Logic Low Drive[5] | $I_{OL}$ | 8 | | | |
| Load | $I_{OUT}$ | | | 15 | pF |
| Output Rise /Fall Time[2] | $t_R/t_F$ | | | | ns |
| <20.000MHz | | | | 4 | |
| 20.000 to 50.000MHz | | | | 4 | |
| 50.001 to 90.000MHz | | | | 3 | |
| 90.000 to 172.000MHz | | | | 2 | |
| Output Leakage, Output Disabled | $I_Z$ | | | ±10 | uA |
| Duty Cycle[2,6] | | 45 | 50 | 55 | % |
| Period Jitter[7] | ϕJ | | | | ps |
| RMS | | | 2.5 | | |
| Peak-{eak | | | 18 | | |
| RMS Jitter, 12kHz-20MHz | ϕJ | | 0.5 | 1 | ps |
| **Enable/Disable** | | | | | |
| Output Enable/Disable[8] | | | | | |
| Output Enable | $V_{IH}$ | 1.26 | | | V |
| Output Disable | $V_{IL}$ | | | 0.5 | V |
| Disable time | $t_D$ | | | 100 | ns |
| Enable Internal Pull-Up Resistor | | | 1 | | Mohm |
| Start-Up Time | $t_{SU}$ | | | 10 | ms |
| Operating Temp, Ordering Option | $T_{OP}$ | -10/70, -40/85, -55/125 | | | °C |

1] The power supply should have by-pass capacitors as close to the supply and to ground as possible, for example 0.1 and 0.01uF.
2] Parameters are tested with the test circuit shown in Figure 1.
3] See Standard Frequencies and Ordering Information tables for more specific information.
4] Includes initial accuracy, operating temperature, supply voltage, shock and vibration (not under operation) and 10 years aging.
5] Output Frequencies > 35MHz.
6] Duty Cycle is measured as On Time/Period, see Fig 2.
7] Broadband Period Jitter measured using a LeCroy Wavemaster 8600A, 90K samples, see Application Note for Typical Phase Noise and Jitter Performance.
8] The Output is Enabled if the Enable/Disable is left open.

# Test Diagram and Waveform

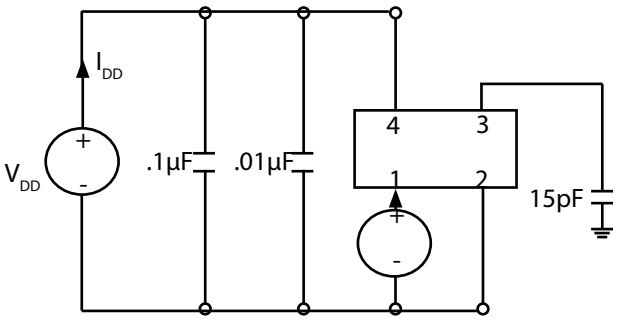


**Fig 1: Test Circuit**

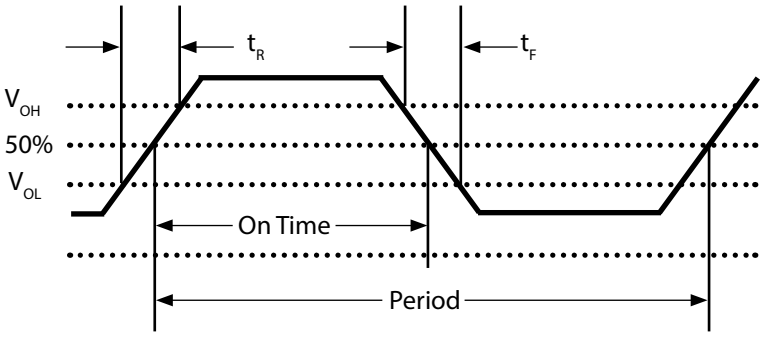


**Fig 2: Waveform**

# Outline Drawing & Pad Layout

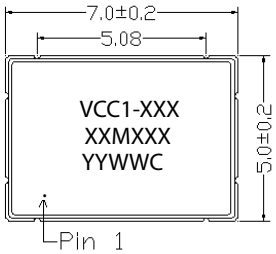


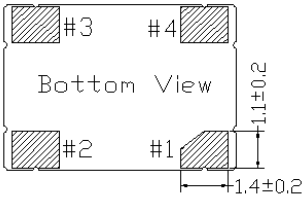


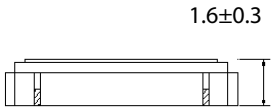


Dimensions in mm

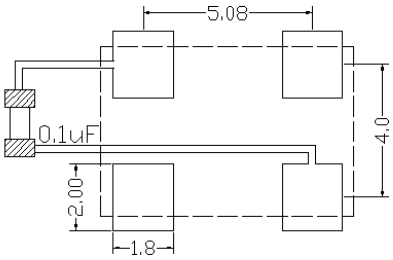


Recommended Soldering Pad Layout

**Table 5. Pin Out**

| Pin | Symbol | Function |
|---|---|---|
| 1 | E/D | Enable Disable |
| 2 | GND | Case and Electrical Ground |
| 3 | Output | Output |
| 4 | $V_{DD}$ | Power Supply Voltage |

**Table 6. Enable Disable Function**

| E/D Pin | Output |
|---|---|
| High | Clock Output |
| Open | Clock Output |
| Low | High Impedance |

# Reliability

Vectron qualification includes aging at various extreme temperatures, shock and vibration, temperature cycling, and IR reflow simulation. The VCC1 family is capable of meeting the following qualification tests:

**Table 7. Environmental Compliance**

| Parameter | Conditions |
|---|---|
| Mechanical Shock | MIL-STD-883, Method 2002 |
| Mechanical Vibration | MIL-STD-883, Method 2007 |
| Temperature Cycle | MIL-STD-883, Method 1010 |
| Solderability | MIL-STD-883, Method 2003 |
| Gross and Fine Leak | MIL-STD-883, Method 1014 |
| Resistance to Solvents | MIL-STD-883, Method 2015 |
| Moisture Sensitivity Level | MSL 1 |
| Contact Pads | Gold (0.3 um min to 1.0 um max) over Nickel |
| Weight | 178 mg |

Although ESD protection circuitry has been designed into the VCC1 proper precautions should be taken when handling and mounting. Vectron employs a human body model (HBM) and a charged device model (CDM) for ESD susceptibility testing and design protection evaluation.

**Table 8. ESD Ratings**

| Model | Minimum | Conditions |
|---|---|---|
| Human Body Model | 1500V | MIL-STD-883, Method 3015 |
| Charged Device Model | 1000V | JESD22-C101 |

Stresses in excess of the absolute maximum ratings can permanently damage the device. Functional operation is not implied at these or any other conditions in excess of conditions represented in the operational sections of this datasheet. Exposure to absolute maximum ratings for extended periods may adversely affect device reliability. Permanent damage is also possible if E/D is applied before $V_{DD}$.

**Table 9. Absolute Maximum Ratings**

| Parameter | Symbol | Ratings | Unit |
|---|---|---|---|
| Storage Temperature | TS | -55 to 125 | °C |
| Soldering Temp/Time | $T_{LS}$ | 260 / 30 | °C / sec |

# IR Reflow

The VCC1 is qualified to meet the JEDEC standard for Pb-Free assembly. The temperatures and time intervals listed are based on the Pb-Free small body requirements. The VCC1 device is hermetically sealed so an aqueous wash is not an issue.

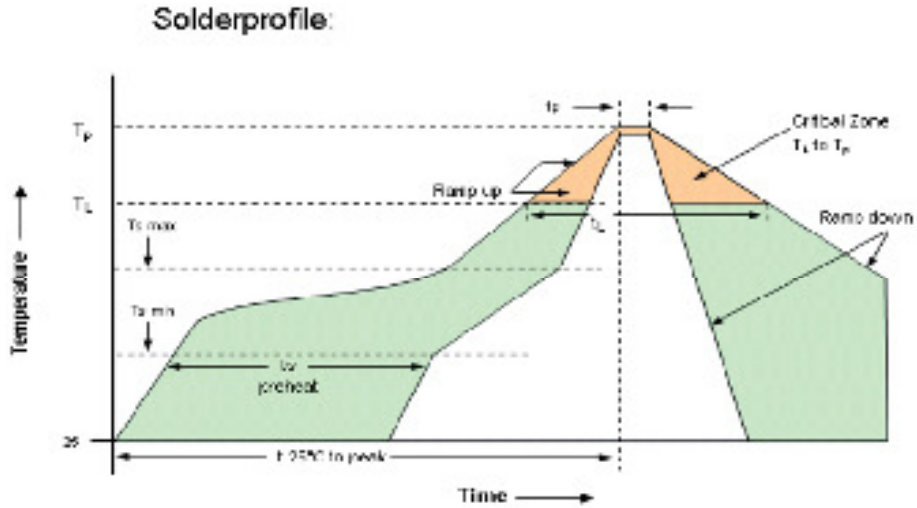


| Table 10. Reflow Profile | | |
|---|---|---|
| **Parameter** | **Symbol** | **Value** |
| PreHeat Time<br>Ts-min<br>Ts-max | $t_S$ | 60 sec Min, 260 sec Max<br>150°C<br>200°C |
| Ramp Up | $R_{UP}$ | 3 °C/sec Max |
| Time Above 217 °C | $t_L$ | 60 sec Min, 150 sec Max |
| Time To Peak Temperature | $T_{AMB-P}$ | 480 sec Max |
| Time at 260 °C | $t_P$ | 30 sec Max |
| Ramp Down | $R_{DN}$ | 6 °C/sec Max |

# Tape and Reel

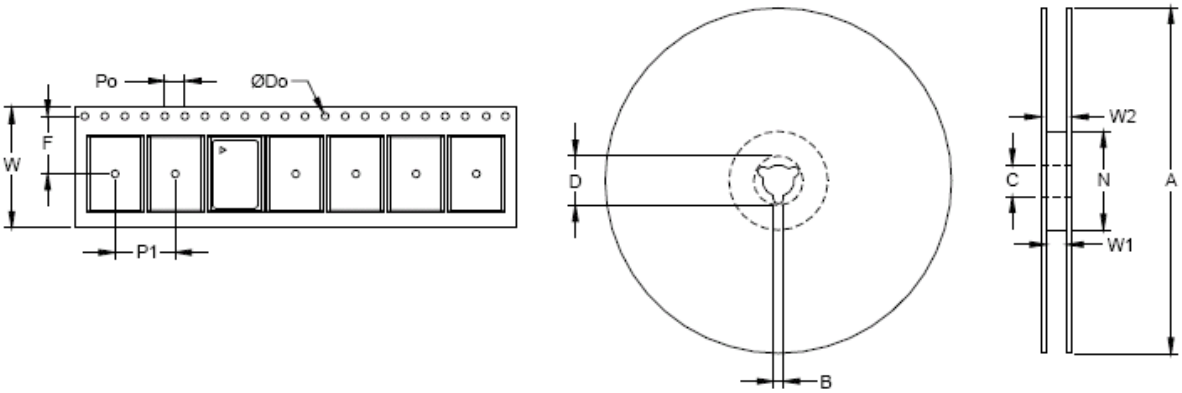


| Table 11. Tape and Reel Information | | | | | | | | | | | | | |
|---|---|---|---|---|---|---|---|---|---|---|---|---|---|
| | Tape Dimensions (mm) | | | | | Reel Dimensions (mm) | | | | | | | |
| **Dimension** | **W** | **F** | **Do** | **Po** | **P1** | **A** | **B** | **C** | **D** | **N** | **W1** | **W2** | **# Per Reel** |
| **Tolerance** | **Typ** | **Typ** | **Typ** | **Typ** | **Typ** | **Typ** | **Min** | **Typ** | **Min** | **Min** | **Typ** | **Max** | |
| VCC1 | 16 | 7.5 | 1.5 | 4 | 8 | 180 | 2 | 13 | 21 | 60 | 17 | 21 | 1000 |

| Table 12. Standard Output Frequencies (MHz) | | | | | | | | | |
|---|---|---|---|---|---|---|---|---|---|
| 1.544 | 1.843 | 2.000 | 2.048 | 2.560 | 3.080 | 3.686 | 4.000 | 4.032 | 4.096 |
| 4.9152 | 5.000 | 6.000 | 6.176 | 7.3728 | 7.680 | 8.000 | 8.192 | 9.216 | 9.600 |
| 9.830 | 10.000 | 10.240 | 10.486 | 12.000 | 12.222 | 12.2725 | 12.288 | 12.352 | 12.500 |
| 12.544 | 12.624 | 12.729 | 12.800 | 12.81089 | 12.960 | 13.000 | 13.070 | 13.107 | 13.200 |
| 13.248 | 13.400 | 13.401 | 13.500 | 13.560 | 13.711 | 13.824 | 14.000 | 14.284 | 14.2848 |
| 14.285 | 14.318 | 14.31818 | 14.336 | 14.400 | 14.500 | 14.5152 | 14.720 | 14.736 | 14.745 |
| 14.746 | 15.000 | 15.211 | 15.360 | 15.555 | 15.625 | 15.748 | 15.74886 | 15.974 | 16.000 |
| 16.016 | 16.128 | 16.368 | 16.384 | 16.388 | 16.500 | 16.588 | 16.610 | 16.660 | 16.666 |
| 16.667 | 16.670 | 16.776 | 16.780 | 16.896 | 16.9344 | 17.000 | 17.0664 | 17.37476 | 17.408 |
| 17.600 | 17.664 | 17.734 | 17.73448 | 17.920 | 17.992 | 18.000 | 18.333 | 18.400 | 18.432 |
| 18.688 | 18.750 | 19.000 | 19.022 | 19.200 | 19.268 | 19.286 | 19.392 | 19.440 | 19.456 |
| 19.530 | 19.654 | 19.660 | 19.6608 | 19.752 | 19.774 | 19.872 | 19.968 | 20.000 | 20.00271 |
| 20.141 | 20.200 | 20.2752 | 20.480 | 20.516 | 20.712 | 20.736 | 20.769 | 20.7692 | 20.800 |
| 20.828 | 20.829 | 20.829 | 20.830 | 20.875 | 20.950 | 20.971 | 21.000 | 21.333 | 21.400 |
| 21.500 | 21.504 | 21.616 | 21.71055 | 21.711 | 22.000 | 22.118 | 22.174 | 22.184 | 22.217 |
| 22.500 | 22.579 | 22.5792 | 22.600 | 22.855 | 22.85568 | 23.000 | 23.040 | 23.732 | 24.000 |
| 24.431 | 24.444 | 24.540 | 24.545 | 24.5454 | 24.576 | 24.704 | 24.832 | 25.000 | 25.088 |
| 25.175 | 25.180 | 25.272 | 25.920 | 26.000 | 26.25641 | 26.664 | 26.6649 | 26.666 | 27.000 |
| 27.120 | 27.500 | 28.000 | 28.224 | 28.60489 | 28.636 | 28.63636 | 28.65645 | 28.672 | 28.800 |
| 29.000 | 29.265 | 29.491 | 29.49893 | 29.500 | 30.000 | 30.150 | 30.200 | 30.720 | 30.880 |
| 31.000 | 31.104 | 31.250 | 31.307 | 31.500 | 31.680 | 31.948 | 31.949 | 32.000 | 32.250 |
| 32.256 | 32.270 | 32.500 | 32.764 | 32.768 | 32.768 | 32.800 | 33.000 | 33.1776 | 33.300 |
| 33.333 | 33.792 | 33.810 | 33.860 | 33.8688 | 34.368 | 34.450 | 34.560 | 34.816 | 35.000 |
| 35.280 | 35.46895 | 35.500 | 35.600 | 35.840 | 35.984 | 36.000 | 36.500 | 36.666 | 36.860 |
| 36.864 | 36.923 | 37.000 | 37.056 | 37.140 | 37.376 | 37.500 | 37.643 | 38.000 | 38.3107 |
| 38.800 | 38.810 | 38.880 | 38.912 | 39.0625 | 39.497 | 39.9278 | 40.000 | 40.010 | 40.079 |
| 40.500 | 40.550 | 40.632 | 40.63232 | 40.920 | 40.960 | 41.472 | 41.500 | 41.657 | 41.660 |
| 41.670 | 41.750 | 41.895 | 41.931 | 42.000 | 42.400 | 42.500 | 42.620 | 43.000 | 43.560 |
| 44.000 | 44.137 | 44.236 | 44.250 | 44.267 | 44.330 | 44.434 | 44.539 | 44.732 | 44.736 |
| 44.928 | 45.000 | 45.135 | 45.158 | 45.818 | 46.080 | 46.232 | 46.2321 | 46.320 | 46.796 |
| 46.864 | 47.13333 | 47.16602 | 47.197 | 47.404 | 47.40437 | 48.000 | 48.33008 | 48.587 | 48.58736 |
| 48.600 | 48.81441 | 49.127 | 49.152 | 49.36221 | 49.408 | 49.512 | 49.58632 | 49.867 | 49.980 |
| 50.000 | 51.156 | 51.200 | 51.840 | 51.840 | 52.000 | 52.416 | 52.500 | 52.560 | 53.125 |
| 53.330 | 54.000 | 54.072 | 54.125 | 54.2174 | 54.500 | 55.000 | 55.289 | 55.500 | 56.000 |
| 56.064 | 56.446 | 56.448 | 56.666 | 57.272 | 57.344 | 57.600 | 57.800 | 58.000 | 58.250 |
| 58.320 | 58.982 | 58.982 | 59.000 | 60.000 | 60.480 | 61.000 | 61.250 | 61.440 | 62.000 |
| 62.208 | 62.500 | 62.800 | 63.000 | 63.8976 | 64.000 | 64.512 | 65.000 | 65.520 | 65.536 |
| 66.000 | 66.600 | 66.660 | 66.666 | 66.667 | 66.670 | 67.500 | 67.584 | 68.000 | 68.680 |
| 68.736 | 69.632 | 70.000 | 70.626 | 70.656 | 70.660 | 70.676 | 70.833 | 71.680 | 72.000 |
| 73.728 | 74.176 | 74.250 | 75.000 | 76.800 | 77.680 | 77.760 | 78.000 | 78.336 | 79.452 |
| 80.000 | 81.000 | 81.920 | 83.000 | 83.300 | 83.333 | 85.000 | 87.040 | 87.182 | 87.472 |
| 89.472 | 89.512 | 89.97804 | 90.000 | 91.008 | 92.000 | 95.000 | 96.000 | 97.776 | 98.304 |
| 100.000 | 102.400 | 103.680 | 104.000 | 106.250 | 110.000 | 112.500 | 114.000 | 115.200 | 116.640 |
| 120.000 | 125.000 | 125.010 | 127.000 | 128.000 | 133.000 | 135.000 | 144.600 | 150.000 | 155.520 |
| 156.250 | 157.000 | 166.000 | 167.000 | 189.000 | 190.000 | | | | |

## Ordering Information

**VCC1- B3B- xxMxxxxxxxXX**

**Product**
7x5 Crystal Oscillator

**Power Supply**
A: +5.0 Vdc, 15pF
B: +3.3 Vdc, 15pF
C: +3.0 Vdc, 15pF
E: +5.0 Vdc, 50pF
F: +3.3 Vdc, 50pF
G: +2.5 Vdc, 15pF
H: +1.8 Vdc, 15pF

**Electrical Options**:
**3: Tri-state 45/55% Duty Cycle**
*The following codes are not recommended for new designs*
0: No Tri-state, 40/60% Duty
1: Tri-state, 40/60% Duty
2: No tri-state, 45/55% Duty
5: Enable, 40/60% Duty
6: Enable, 45/55% Duty

**Packaging**
TR: Tape and Reel
blank: Cut Tape / non Tape and Reel quantities
_SNPB: Tin lead solder dipped

Frequency in MHz

**Stability**
A: ±100ppm over -10/70°C
B: ±50ppm over -10/70°C
C: ±100ppm over -40/85°C
D: ±50ppm over -40/85°C
E: ±25ppm over -10/70°C
F: ±25ppm over -40/85°C
K: ±32ppm over -10/70°C
O: ±32ppm over -40/85°C
P: ±100ppm over -55/125°C
R: ±50ppm over -55/125°C

**Note: not all combination of options are available.*
*Other specifications may be available upon request.*

**Example:**

| | |
|---|---|
| **VCC1-B3D-125M0000000TR** | **Tape and Reel** |
| **VCC1-B3D-125M0000000** | **Cut Tape** |
| **VCC1-B3D-125M0000000_SNPB** | **Tin lead solder dipped** |

## 20ppm Stability Ordering Information

VCC1-105-frequency = ±20ppm over -10/70°C, +5.0Vdc, 45/55% Duty Cycle, 15pF load
VCC1-103-frequency = ±20ppm over -10/70°C, +3.3Vdc, 45/55% Duty Cycle, 15pF load
VCC1-118-frequency = ±20ppm over -10/70°C, +2.5Vdc, 45/55% Duty Cycle, 15pF load
VCC1-119-frequency = ±20ppm over -10/70°C, +1.8Vdc, 45/55% Duty Cycle, 15pF load

**Example:**

| | |
|---|---|
| **VCC1-105-19M4400000TR** | **Tape and Reel** |
| **VCC1-105-19M4400000** | **Cut Tape** |
| **VCC1-105-19M4400000_SNPB** | **Tin lead solder dipped** |

## Revision History

| Revision Date | Approved | Description |
|---|---|---|
| August 10, 2018 | FB | Update logo and contact information, add SNPBDIP ordering option |
| August 08, 2019 | FB | Update logo and contact information, change to SNPB ordering |
| April 30, 2020 | FB | Add tape and reel ordering option |

## Contact Information


***USA:***
100 Watts Street
Mt Holly Springs, PA 17065
Tel: 1.717.486.3411
Fax: 1.717.486.5920

***Europe:***
Landstrasse
74924 Neckarbischofsheim
Germany
Tel: +49 (0) 7268.801.0
Fax: +49 (0) 7268.801.281



Information contained in this publication regarding device applications and the like is provided only for your convenience and may be superseded by updates. It is your reasonability to ensure that your application meets with your specifications. MICROCHIP MAKES NO REPRESENTATION OR WARRANTIES OF ANY KIND WHETHER EXPRESS OR IMPLIED, WRITTEN OR ORAL, STATUTORY OR OTHERWISE, RELATED TO THE INFORMATION INCLUDING, BUT NOT LIMITED TO ITS CONDITION, QUALITY, PERFORMANCE, MERCHANTABILITY OR FITNESS FOR PURPOSE. Microchip disclaims all liability arising from this information and its use. Use of Microchip devices in life support and/or safety applications is entirely at the buyer's risk, and the buyer agrees to defend, indemnify and hold harmless Microchip from any and all damages, claims, suits, or expenses resulting from such use. No licenses are conveyed, implicitly, or otherwise, under any Microchip intellectual property rights unless otherwise stated.

**Trademarks**
The Microchip and Vectron names and logos are registered trademarks of Microchip Technology Incorporated in the U.S.A. and other countries.